MORNINGSTAR corporation

RELAY DRIVER™

LOGIC MODULE ACCESSORY FOR SOLAR CONTROLLERS

Morningstar's ***Relay Driver*** is a logic module which provides high level system control functions such as high/low voltage alarms, load control and generator start. The product controls **four** independent relay driver outputs by reading digital data inputs from Morningstar's TriStar controller or by reading battery voltage when used in systems with other controllers.

Typical Functions

- ***High and Low Alarm Contacts for Industrial Applications***
- ***Load Control Including High Power Applications (pumps and large motors)***
- ***Temperature Controlled Settings for Battery Fans or Cooling Vents***
- ***Generator Start Functions***
- ***Auxiliary AC Backup Charge Control***

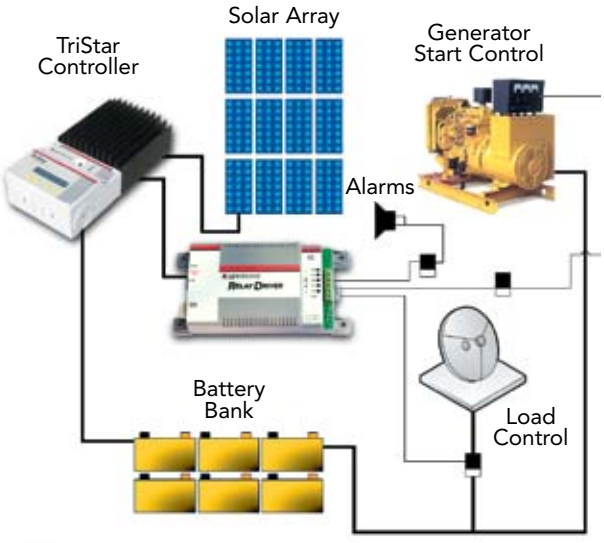

Data Control Input Options

- ***Connected to a TriStar Controller:***
  Battery voltage, charge/load current, battery temperature, TriStar heatsink temperature, PWM duty cycle, PV/load voltage, and all TriStar alarms or faults.
- ***Used in Systems with Other Controllers:***
  Battery voltage, Relay Driver temperature, input voltages from other sources.

Key Features and Benefits

- ***Cost Effective***
  The four channels provide up to four high level system control functions at a lower cost compared to other alarm and generator start packages.
- ***High Reliability***
  Each channel has complete electronic protections for high reliability.
- ***Flexibility***
  The system designer may choose the exact relay needed for each application including a wide range of current ratings and solid state, mechanical or mercury displacement relays.
- ***Fully Programmable***
  It is easy to program the Relay Driver with the included PC software via serial RS-232 port connection. Data is stored in non-volatile memory. The Relay Driver is pre-programmed with four commonly used settings.
- ***Advanced Generator Control***
  Provides flexible parameters to control one, two or three-wire generator schemes and complete control of preheat, crank, ignition and cool-down.
- ***Industrial Design***
  Each relay driver output may be controlled directly by MODBUS commands via the RS-232 for use with PLC's and other industrial hardware. Mounts to a DIN rail or a flat surface.
- ***LED Indicators***
  Displays power and status of each channel as well as faults and data sampling intervals.

RELAY DRIVER™ LOGIC MODULE ACCESSORY

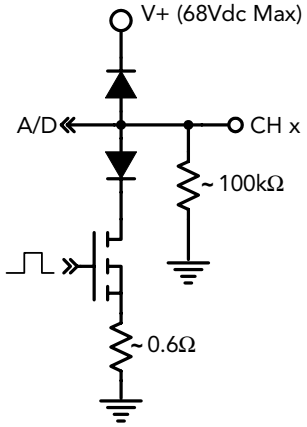

General Channel Schematic

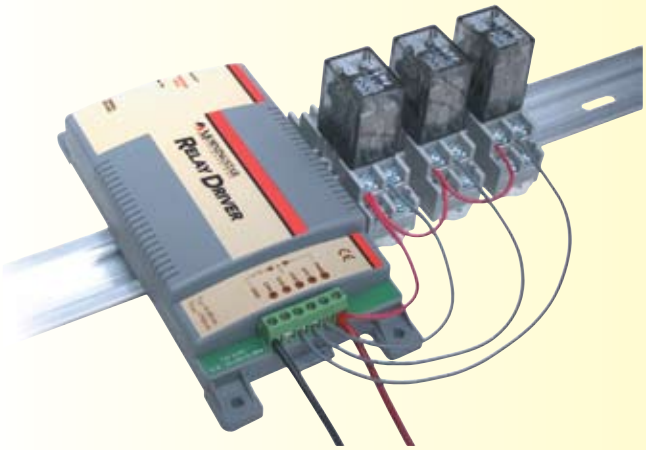

DIN Rail Mounted Relay Driver with Relays

TECHNICAL SPECIFICATIONS

Electrical

• **System Voltage**	12 to 48 Volts*
• **Max. Channel Current**	750 mA
• **Accuracy** **Voltage** **Temperature**	 2% ± 50 mV ± 2˚C
• **Min. Operating Voltage**	8 Volts
• **Max. Operating Voltage**	68 Volts
• **Self-consumption**	< 20 mA
• **Temperature Sensor Range**	–40˚C to +85˚C
• **Transient Surge Protection**	1500 W / channel
• **Comm. Ports (opto-isolated)**	(2) RJ-11 meter bus connections (1) 9-pin serial RS-232

*voltage of user selected relays must be same as battery voltage

Electronic Protections

- **Reverse Polarity Protection**
- **Short-Circuit Protection**
- **Overcurrent Protection**
- **Lightning and Transient Surge Protection**

Mechanical

• **Dimensions**	Length: 16.3 cm / 6.4 inch Width: 8.1 cm / 3.2 inch Depth: 3.3 cm / 1.3 inch
• **Weight**	0.2 kg / 0.4 lb
• **Largest Wire**	1.0 to 0.25 mm^2 16 to 24 AWG
• **Torque Terminals**	0.4 Nm / 3.5 in-lb
• **Enclosure**	Type 1, indoor rated
• **DIN Rail Attachment**	35 mm standard

Environmental

• **Operating Temperature**	–40˚C to +45˚C
• **Storage Temperature**	–55˚C to +85˚C
• **Humidity**	100% (NC)
• **Tropicalization**	Conformal coating on both sides of printed circuit board

WARRANTY: ***Five year warranty period. Contact Morningstar or your authorized distributor for complete terms.***

AUTHORIZED MORNINGSTAR DISTRIBUTOR:

YHI
0800 99 33 44
energysales@yhi.co.nz
yhienergy.co.nz
YHI Energy